Operation: The 4MHz signal at pin 9 of the 74LS92 is asymetrical. Hex inverter gates B and C introduce some propagation delay to produce a nearly symetrical 4 MHz clock. NAND gates A, B, and C switch between 2 and 4 MHz in response to the voltage signal from the User's port on pin 16 of the left side bus.

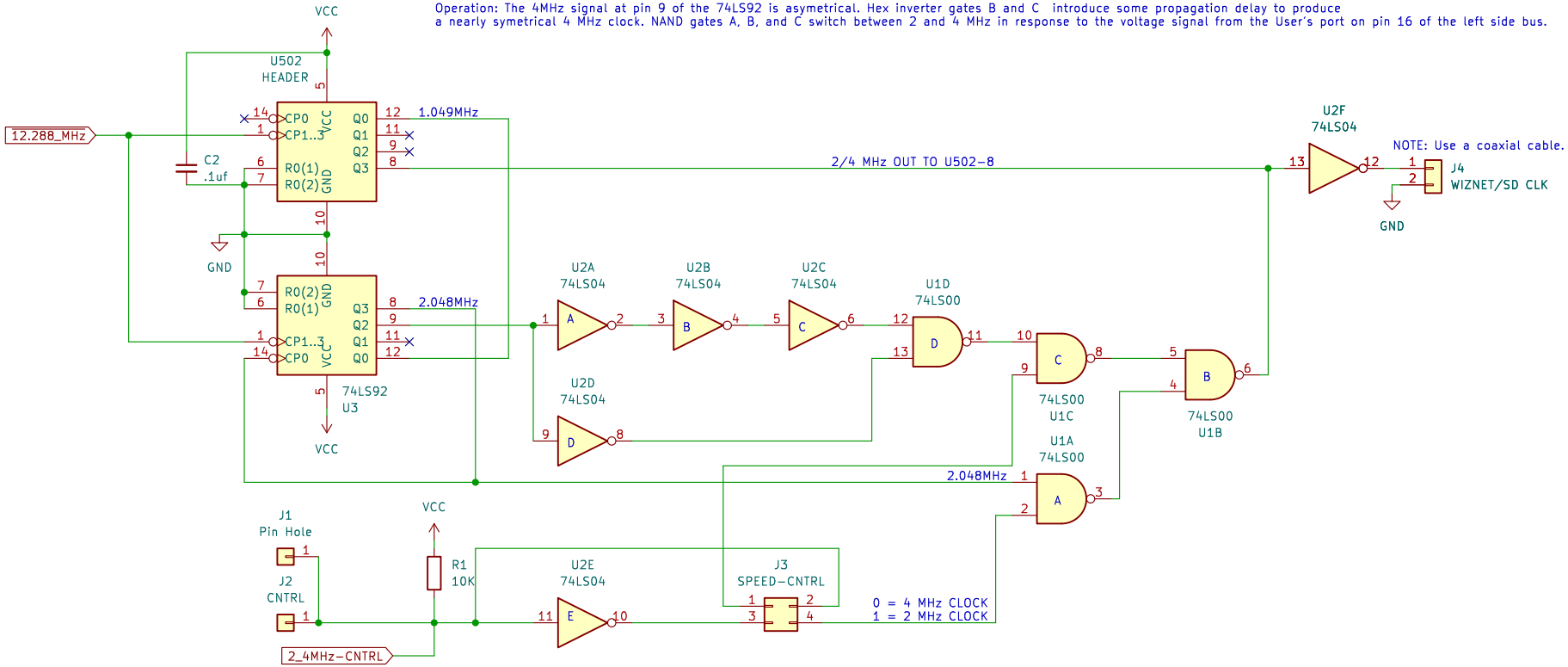

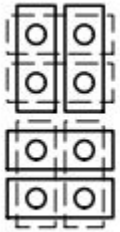

4 MHz when Control = 0; 2 MHz when Control = 1.

2 MHz when Control = 0; 4 MHz when Control = 1.

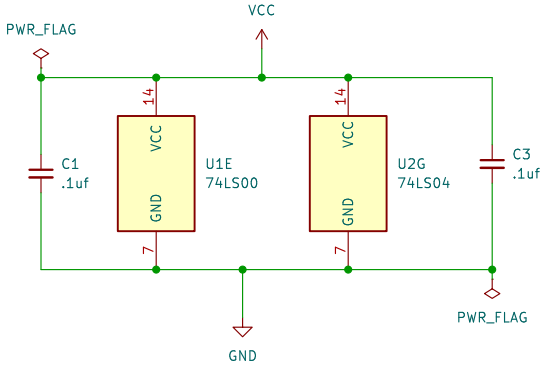

NEW DESIGN
KOYADO.COM
Sheet: /
File: H89-2_4-MHz-SPEED-MODULE.kicad_sch

Title: H89-SPEED-MODULE

Size: A	Date: 2025-02-08	**Rev: 1.01**
KiCad E.D.A. kicad 7.0.10		Id: 1/1