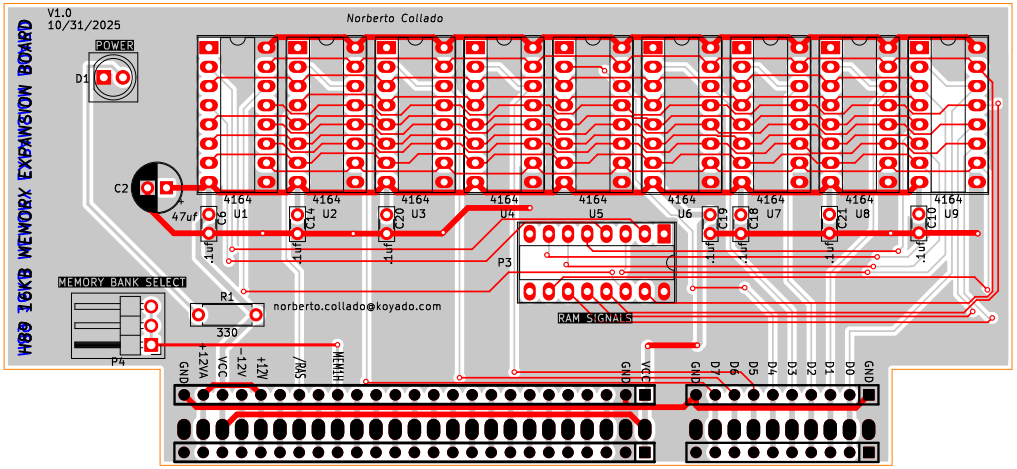

Board2Pdf: Colored-TOP - Page 1/1

Sheet: Colored-TOP
File: H89-16_64KB-BOARD-RS.kicad_pcb

Title: H89-16KB-BOARD

Size: A	Date: 2025-09-27	Rev: V1.0
KiCad E.D.A. kicad 7.0.10		Id: 1/1