SCHEMATIC OF THE HEATHKIT FLOPPY DISK INTERFACE

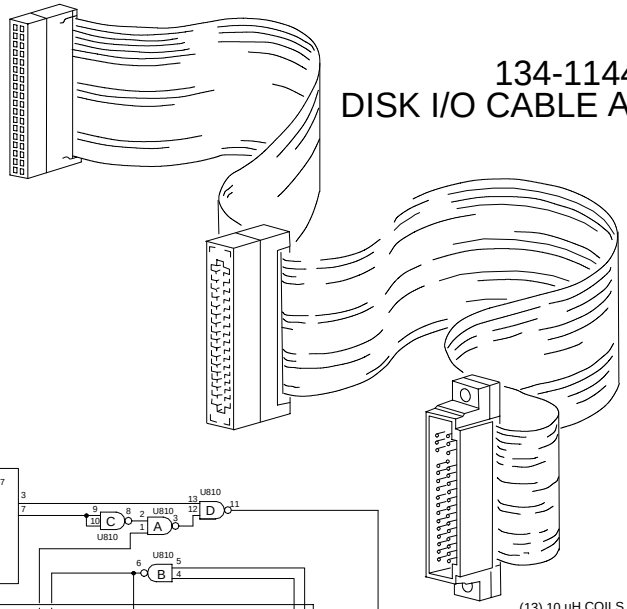

134-1144 DISK I/O CABLE ASSEMBLY

NOTES

1. ALL RESISTORS ARE 1/4 WATT, 5% UNLESS MARKED OTHERWISE. RESISTOR VALUES ARE IN OHMS (K=1000, M=1,000,000)
2. ALL CAPACITORS ARE IN uF UNLESS MARKED OTHERWISE.
3. ⏚ THIS SYMBOL INDICATES CIRCUIT BOARD GROUND.
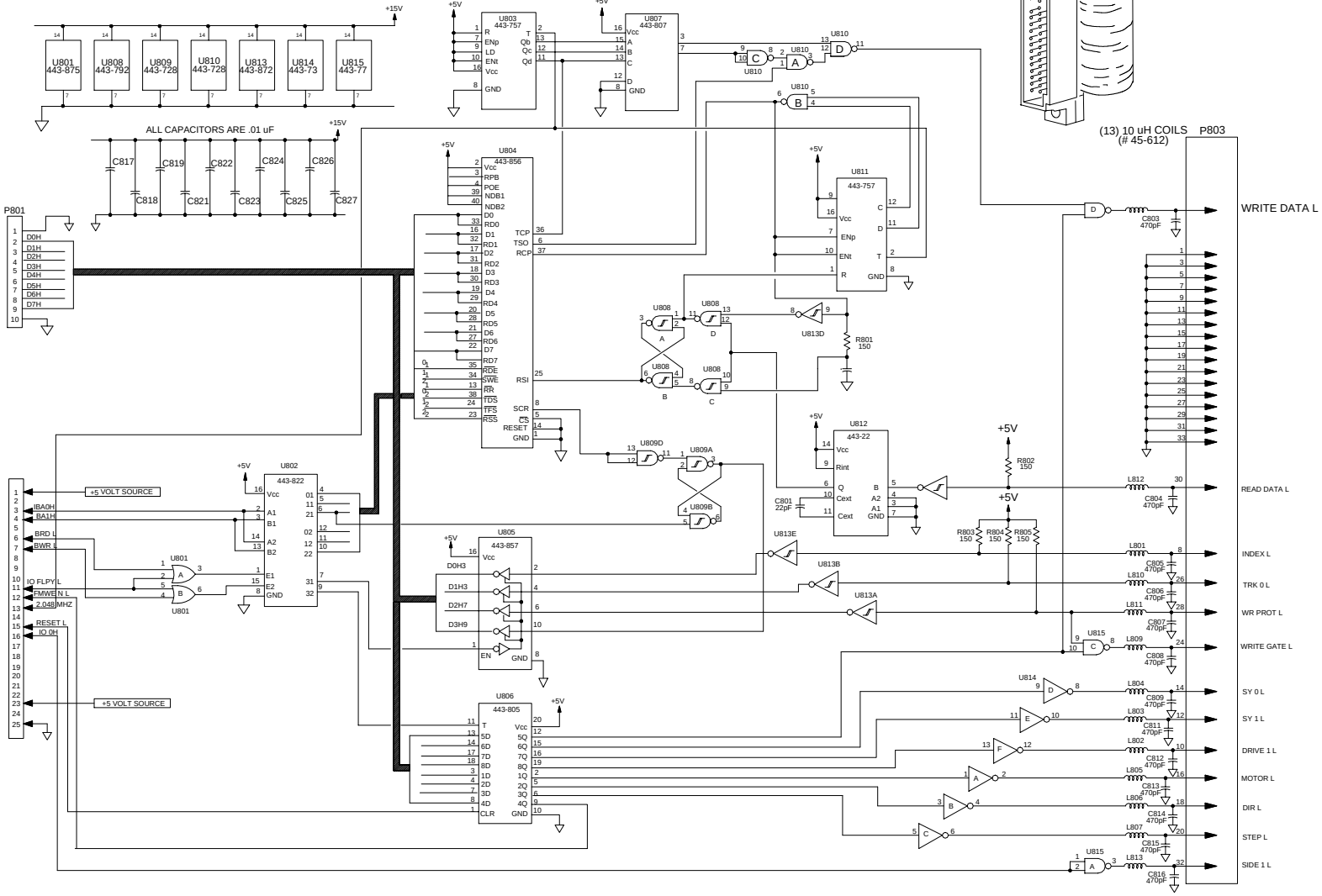
LAST USED:	NOT USED:
U815	U801C, D
R905	U809C
C827	U813E
L813	U815B
P803	C810, C820