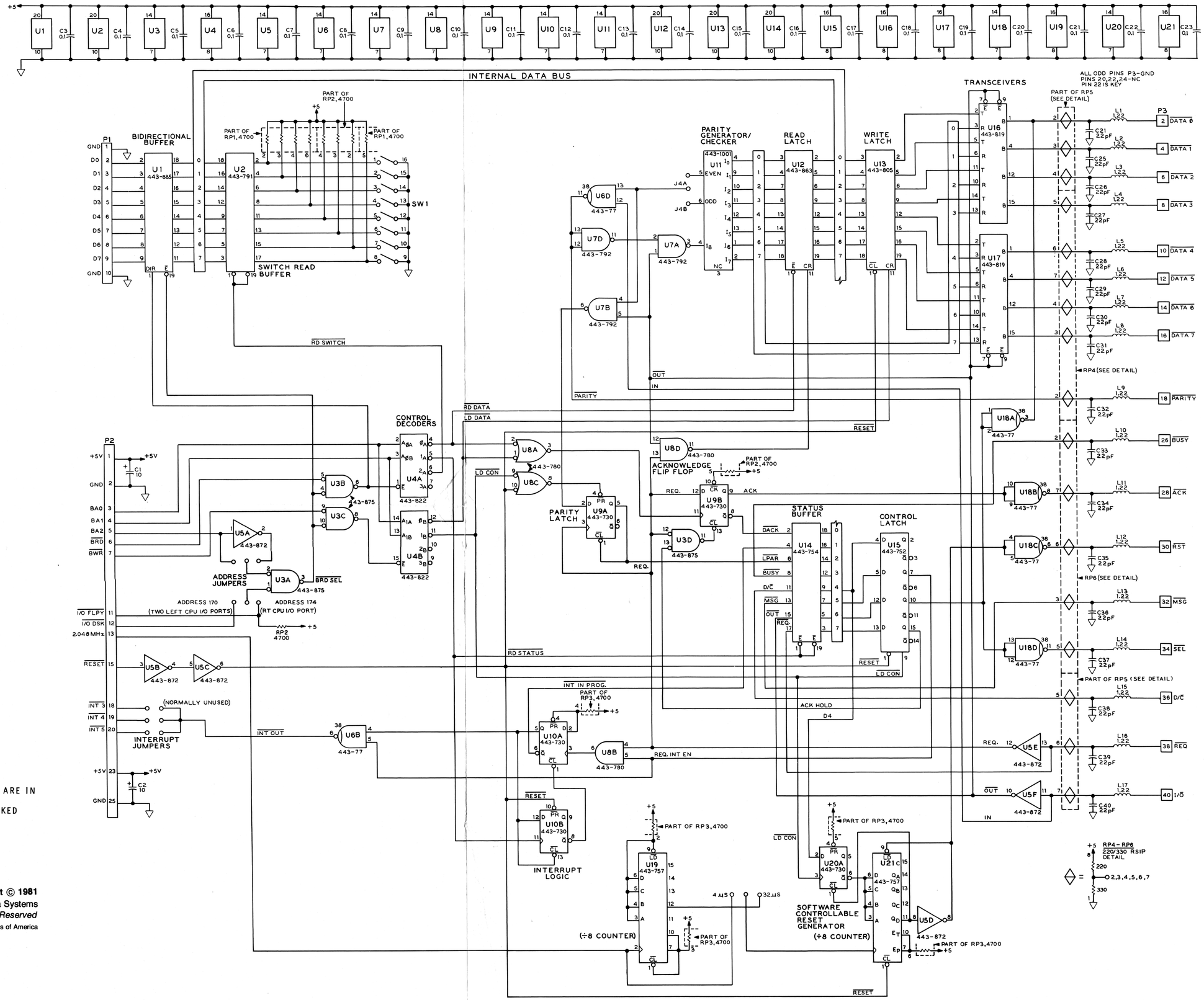

ZENITH | data systems

INTERFACE BOARD
Model Z-89-67

NOTES:

1. ALL RESISTORS ARE 1/4 WATT, 5%. RESISTOR VALUES ARE IN OHMS (K=1,000; M=1,000,000).
2. ALL CAPACITORS ARE IN MICROFARADS UNLESS MARKED OTHERWISE.
3. ALL INDUCTORS ARE IN H.
4. ⏚ THIS SYMBOL INDICATES A CIRCUIT BOARD GROUND.

Copyright © 1981
Zenith Data Systems
All Rights Reserved
Printed in the United States of America

Part of 595-2697