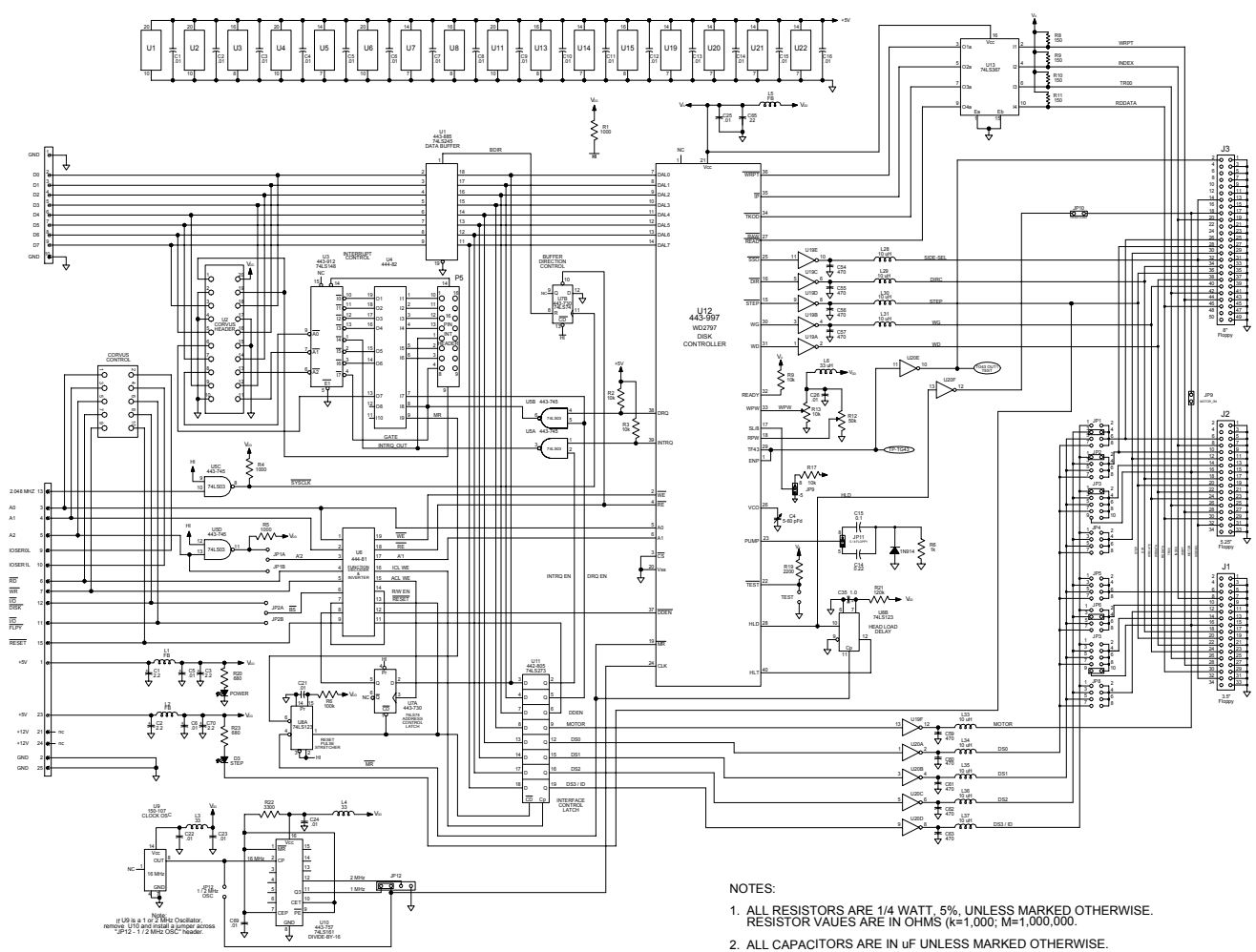

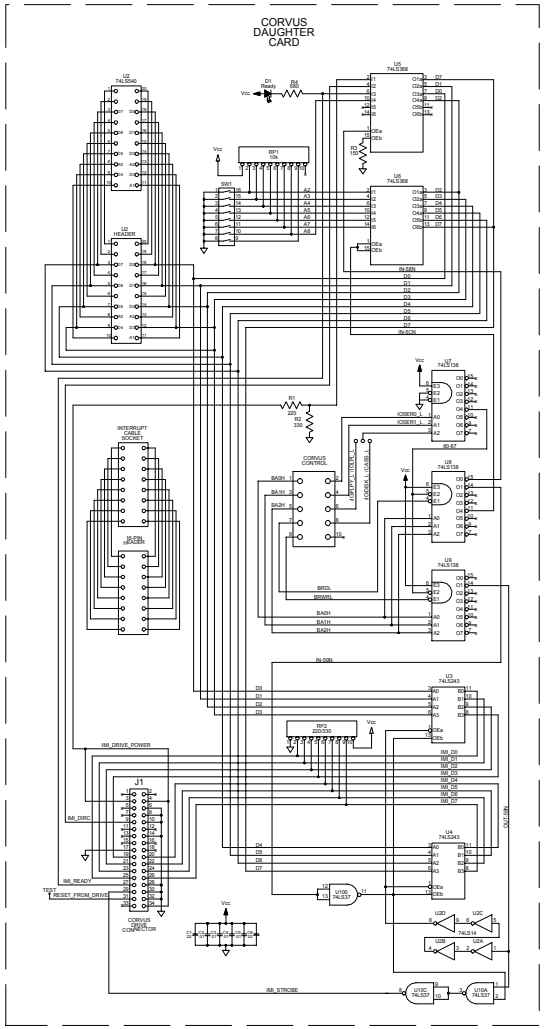

NOTES:

1. ALL RESISTORS ARE 1/4 WATT, 5%, UNLESS MARKED OTHERWISE. RESISTOR VAUES ARE IN OHMS (k=1,000; M=1,000,000.
2. ALL CAPACITORS ARE IN uF UNLESS MARKED OTHERWISE.
3. ALL INDUCTORS ARE IN uH.
4. ↓ THIS SYMBOL INDICATES CIRCUIT BOARD GROUND.
5. When the Z37 card is used for a CORVUS interface, U2 (74LS540) and the Interrupt cable are removed from the Z37 card. U2 and the Interrupt cable are then installed on the daughter card.

Z89-37-CORVUS FLOPPY DISK CONTROLLER INTERFACE

Copyright© Norberto Collado - 2011

KOYADO.COM

Title: Z89-37-CORVUS Schematic
Sheet 1 of 1

Rev: 0.2

Drafted by: Kenneth L. Owen