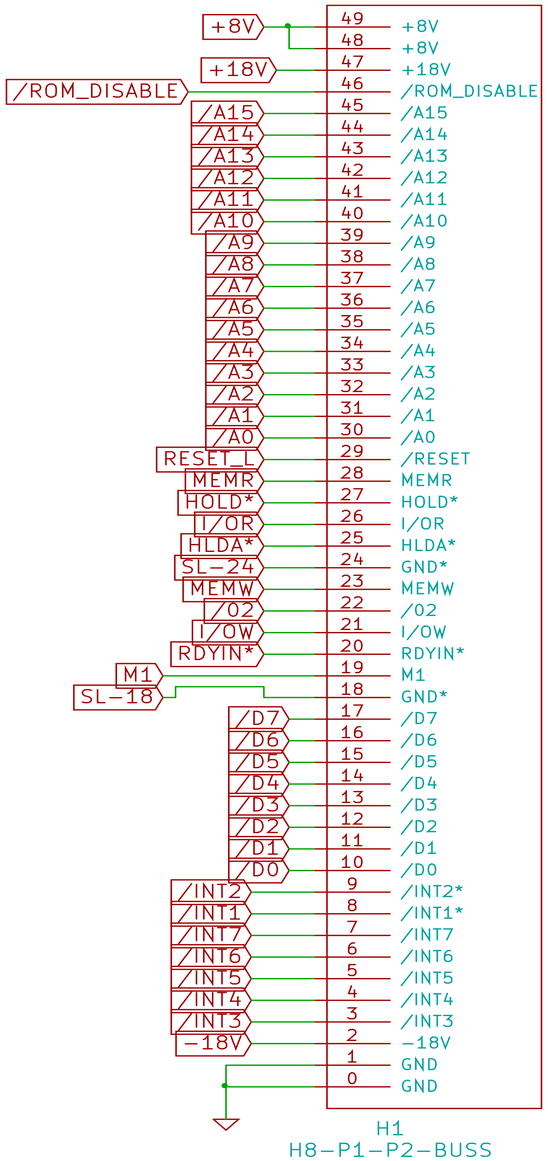

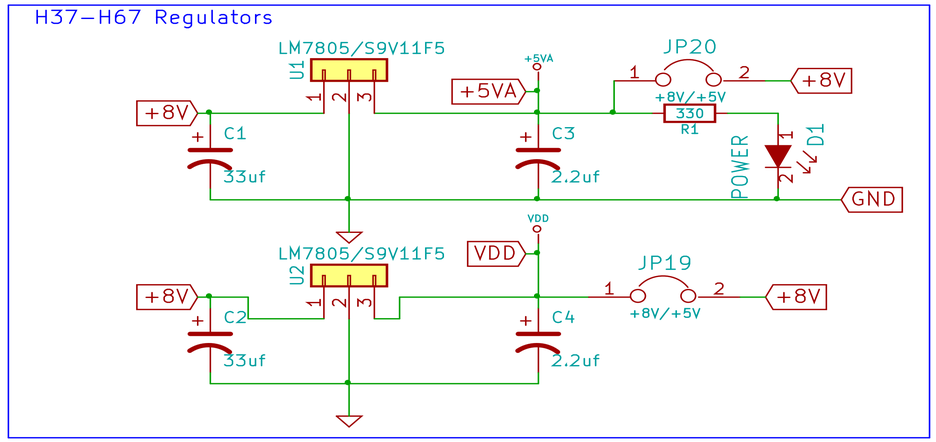

Sheet: H67-H37 Schematic

File: H67-H37.sch

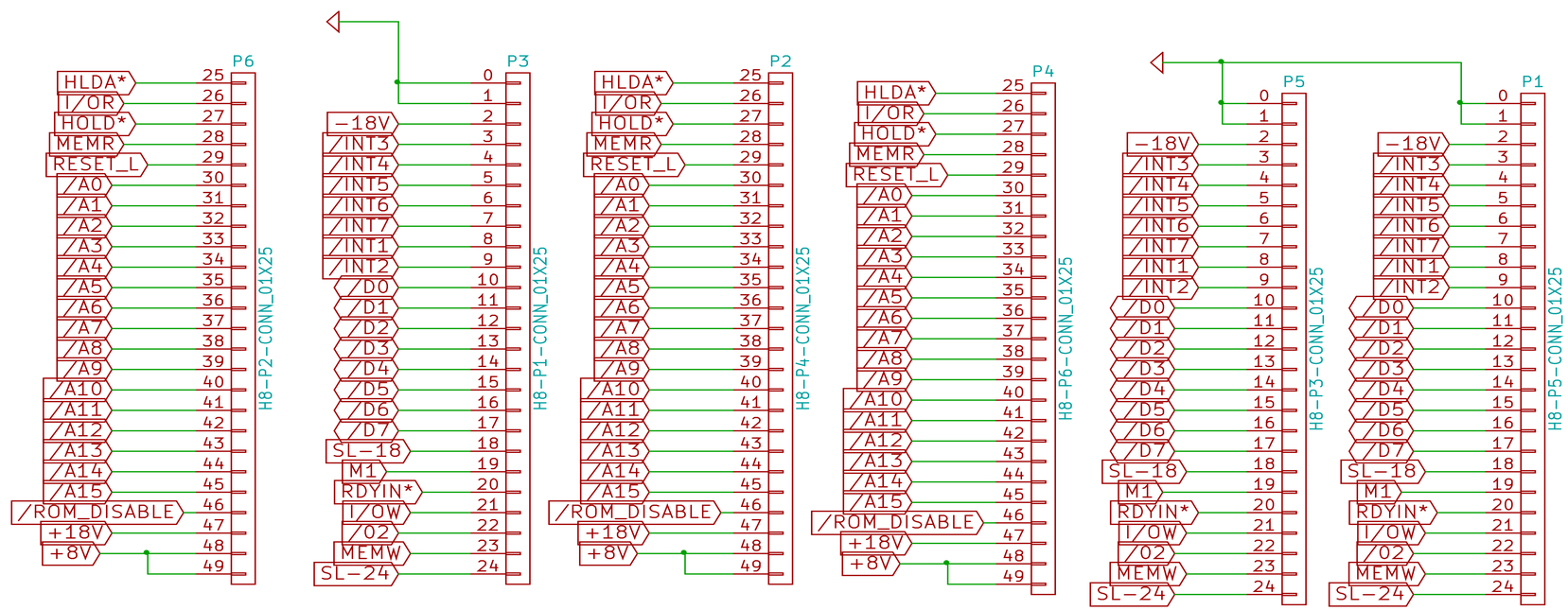

H8-H17-H37-H67-USB STORAGE CONTROLLER

Copyright Norberto Collado @ 2010

KOYADO.COM

File: H8-H67-H37-H17.sch

Sheet: /

Title: H8-H17-H37-H67-USB STORAGE CONTROLLER

Size: A	Date: 25 aug 2020	**Rev: 1.0**
KiCad E.D.A. eeschema (2013-07-07 BZR 4022)-stable		Id: 1/2

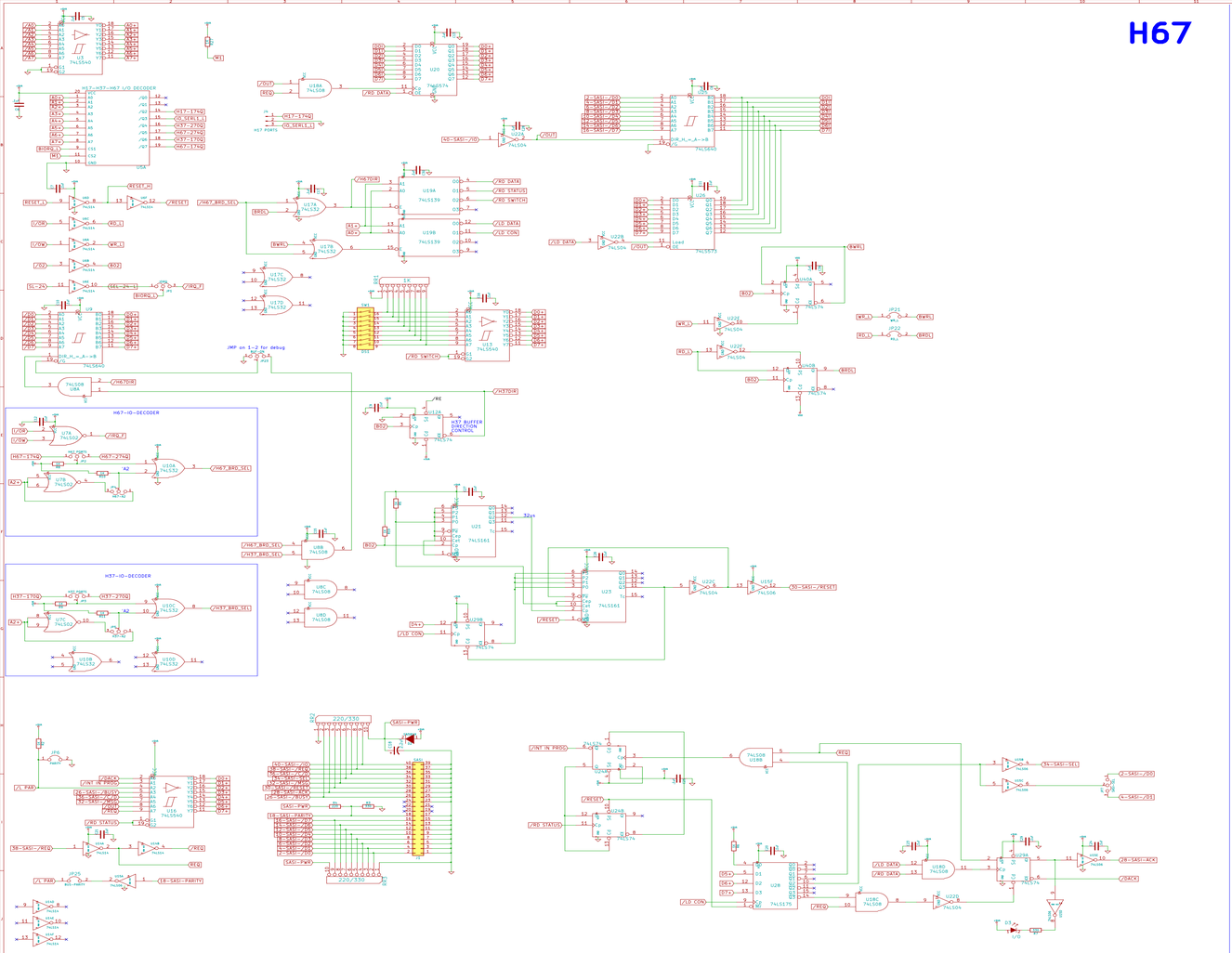
H67
H37
H37=H37-H67 I/O DECODER
H67-IO-DECODER
H37-IO-DECODER
H37 BUFFER DIRECTION CONTROL
JMP on 1-2 for debug
220/330
74LS540
74LS139
74LS245
74LS161
74LS174
74LS08
74LS32
74LS04
74LS179
74LS273

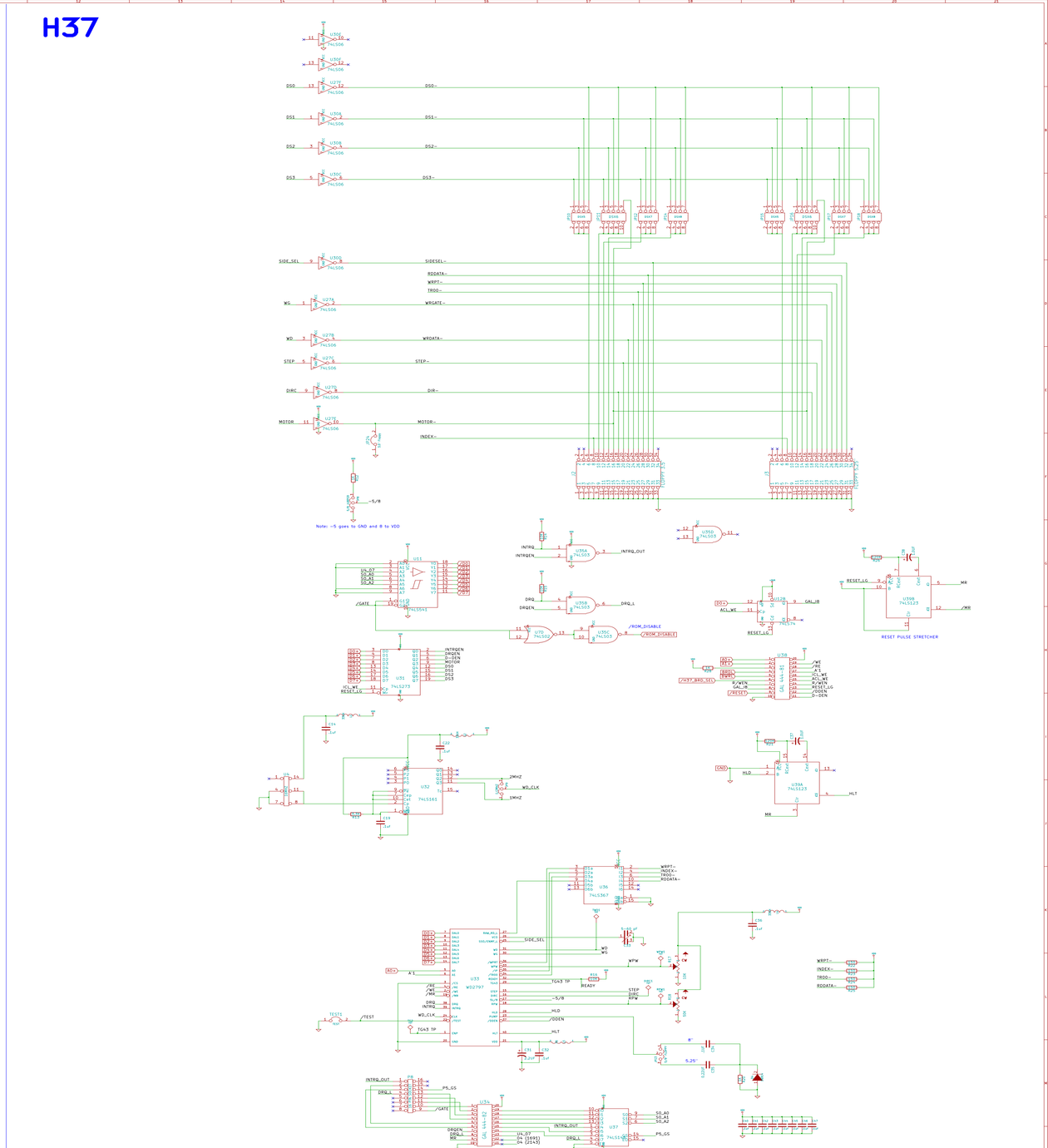
DS0
DS1
DS2
DS3
SIDE_SEL
MG
WD
STEP
DIRC
MOTOR
RDDATA-
WRPT-
TR00-
WRGATE-
WRDATA-
STEP-
DIR-
MOTOR-
INDEX-
Note: -5 goes to GND and 8 to VDD
INTRQ
INTRQEN
DRQ
DRQEN
/ROM_DISABLE
RESET_LG
RESET PULSE STRETCHER
INTRQEN
DRQEN
MOTOR
DS0
DS1
DS2
DS3
2MHZ
WD_CLK
HLD
MR
WRPT-
INDEX-
TR00-
RDDATA-
SIDE_SEL
WD
WG
NPW
TG43 TP
READY
STEP
DIRC
RPW
-5/8
/DEN
HLT
/TEST
INTRQ_OUT
DRQ_L
PS_GS
SO_A0
SO_A1
SO_A2
KOYADO.COM
File: H67-H37.sch
Sheet /H67-H37 Schematic/
Title: HB-H67-H37-H67-USB-CONTROLLER
Rev: Rev 1.0
Sheet 2 of 2