H-89 / 90 Speed Modification

Speed Mod circuit originally marketed by Micronics Technology.

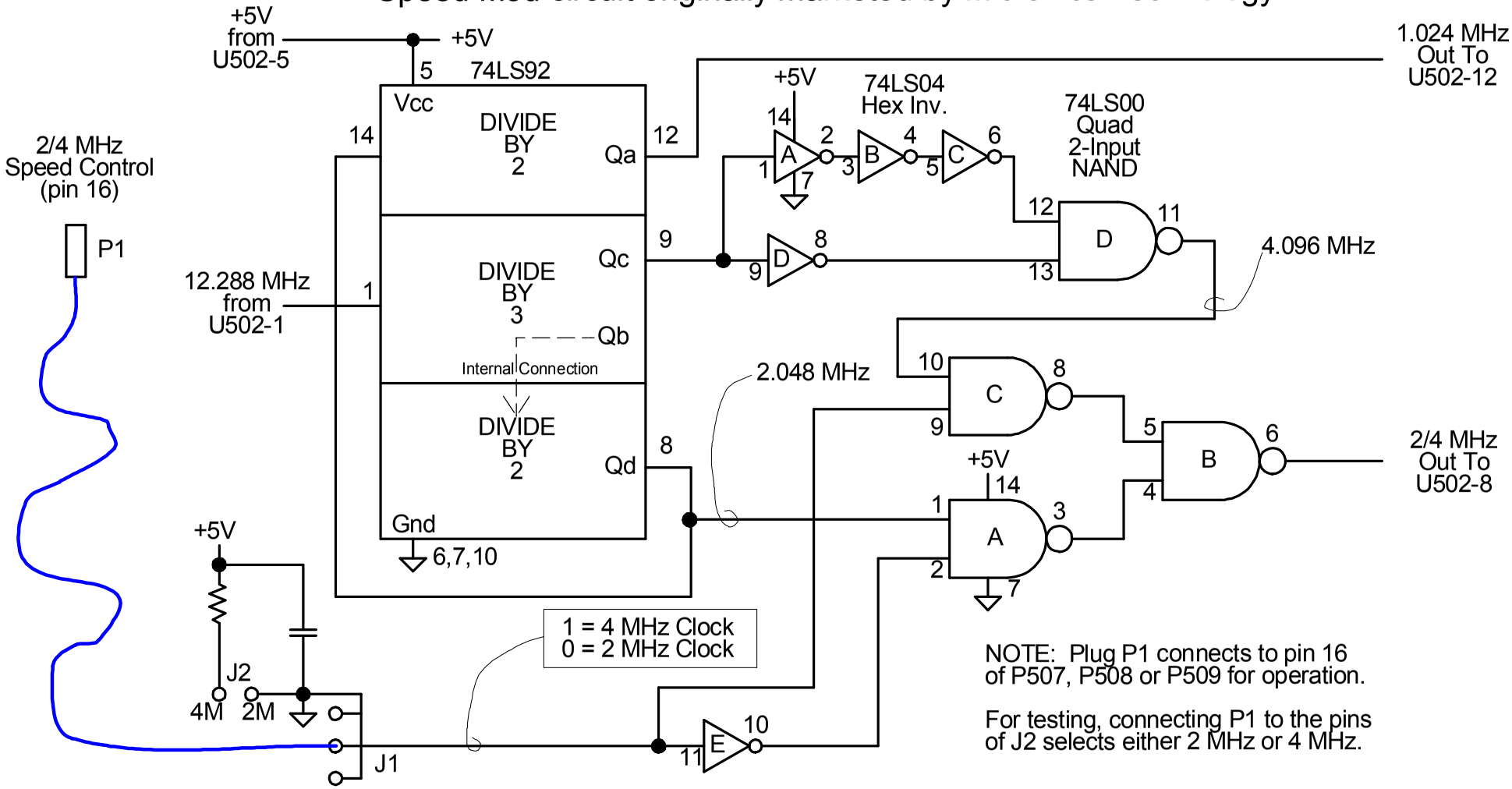

Operation: The 4 MHz signal at pin 9 of the 74LS92 is asymetical. Hex inverter gates B and C introduce some propagation delay to produce a nearly symetrical 4 MHz clock. NAND gates A, B, and C switch between 2 and 4 MHz in response to the voltage signal from the User's port on pin 16 of the left side bus.